BH42-70010-G-A-01-02-Service (L322-11MY-(OB1)

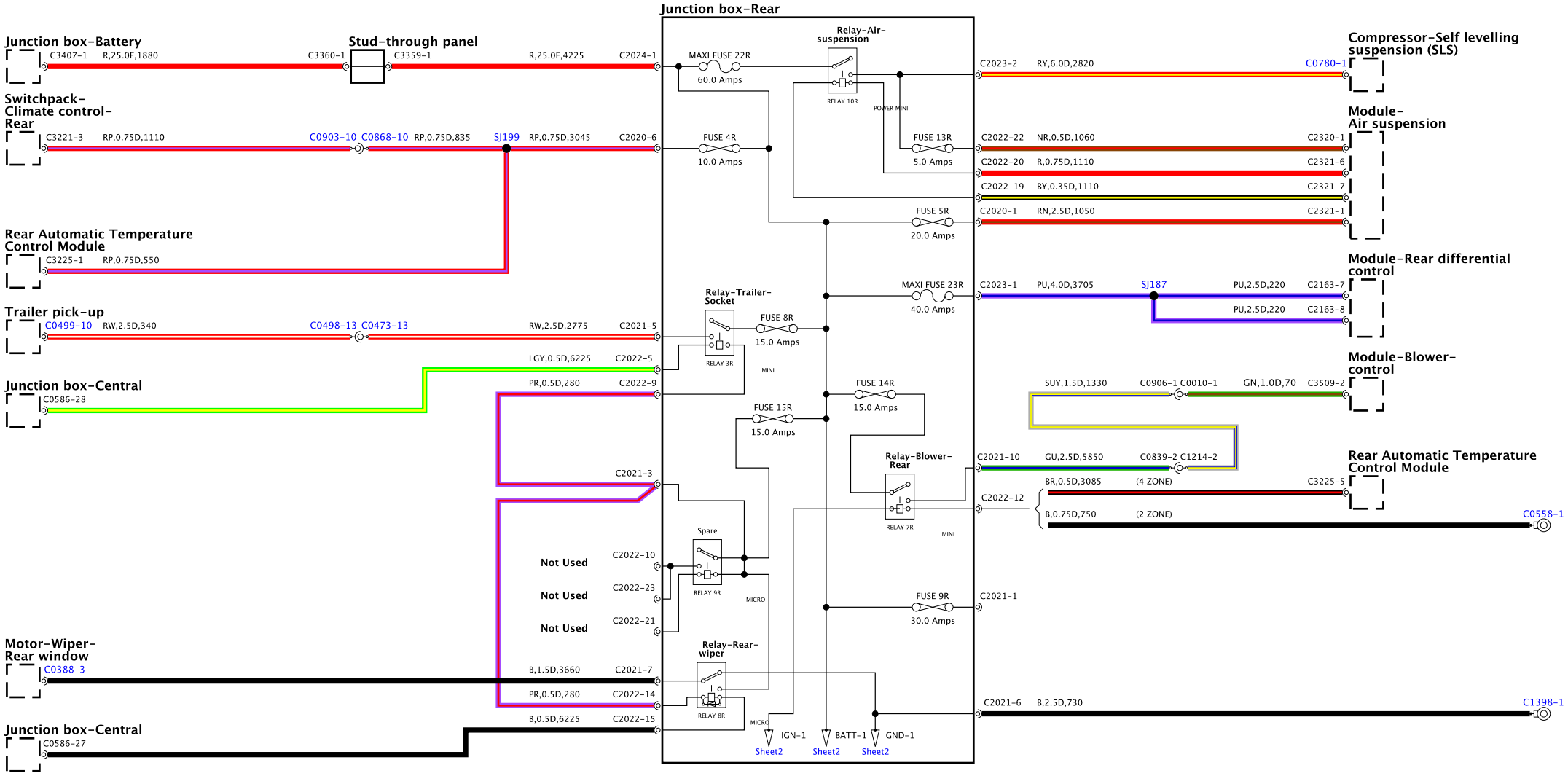

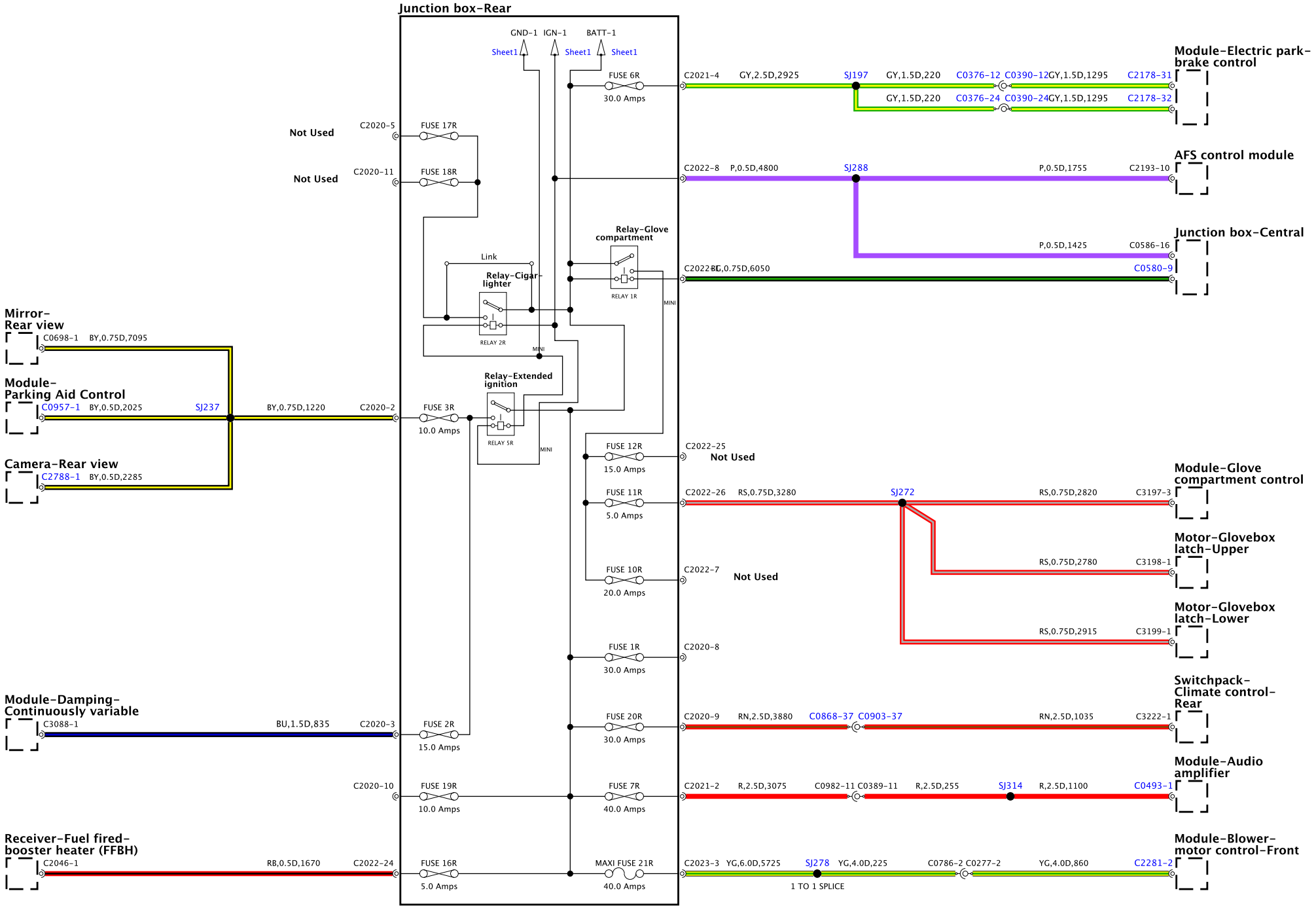
Junction box-Rear
GND-1
IGN-1
BATT-1
Sheet1
Sheet1
Sheet1
FUSE 6R
30.0 Amps
C2021-4
GY,2.5D,2925
SJ197
GY,1.5D,220
C0376-12
C0390-12
GY,1.5D,1295
C2178-31
GY,1.5D,220
C0376-24
C0390-24
GY,1.5D,1295
C2178-32
Module-Electric park-brake control
Not Used
C2020-5
FUSE 17R
Not Used
C2020-11
FUSE 18R
C2022-8
P,0.5D,4800
SJ288
P,0.5D,1755
C2193-10
AFS control module
Relay-Glove compartment
Link
Relay-Cigar-lighter
RELAY 1R
RELAY 2R
MINI
MINI
P,0.5D,1425
C0586-16
Junction box-Central
C2022-26
BG,0.75D,6050
C0580-9
Mirror-Rear view
C0698-1
BY,0.75D,7095
Module-Parking Aid Control
C0957-1
BY,0.5D,2025
SJ237
BY,0.75D,1220
C2020-2
FUSE 3R
10.0 Amps
Relay-Extended ignition
RELAY 5R
MINI
Camera-Rear view
C2788-1
BY,0.5D,2285
FUSE 12R
15.0 Amps
C2022-25
Not Used
FUSE 11R
5.0 Amps
C2022-26
RS,0.75D,3280
SJ272
RS,0.75D,2820
C3197-3
Module-Glove compartment control
Motor-Glovebox latch-Upper
RS,0.75D,2780
C3198-1
FUSE 10R
20.0 Amps
C2022-7
Not Used
Motor-Glovebox latch-Lower
RS,0.75D,2915
C3199-1
FUSE 1R
30.0 Amps
C2020-8
Switchpack-Climate control-Rear
Module-Damping-Continuously variable
C3088-1
BU,1.5D,835
C2020-3
FUSE 2R
15.0 Amps
FUSE 20R
30.0 Amps
C2020-9
RN,2.5D,3880
C0868-37
C0903-37
RN,2.5D,1035
C3222-1
Module-Audio amplifier
C2020-10
FUSE 19R
10.0 Amps
FUSE 7R
40.0 Amps
C2021-2
R,2.5D,3075
C0982-11
C0389-11
R,2.5D,255
SJ314
R,2.5D,1100
C0493-1
Receiver-Fuel fired-booster heater (FFBH)
C2046-1
RB,0.5D,1670
C2022-24
FUSE 16R
5.0 Amps
MAXI FUSE 21R
40.0 Amps
C2023-3
YG,6.0D,5725
SJ278
YG,4.0D,225
C0786-2
C0277-2
YG,4.0D,860
C2281-2
1 TO 1 SPLICE
Module-Blower-motor control-Front